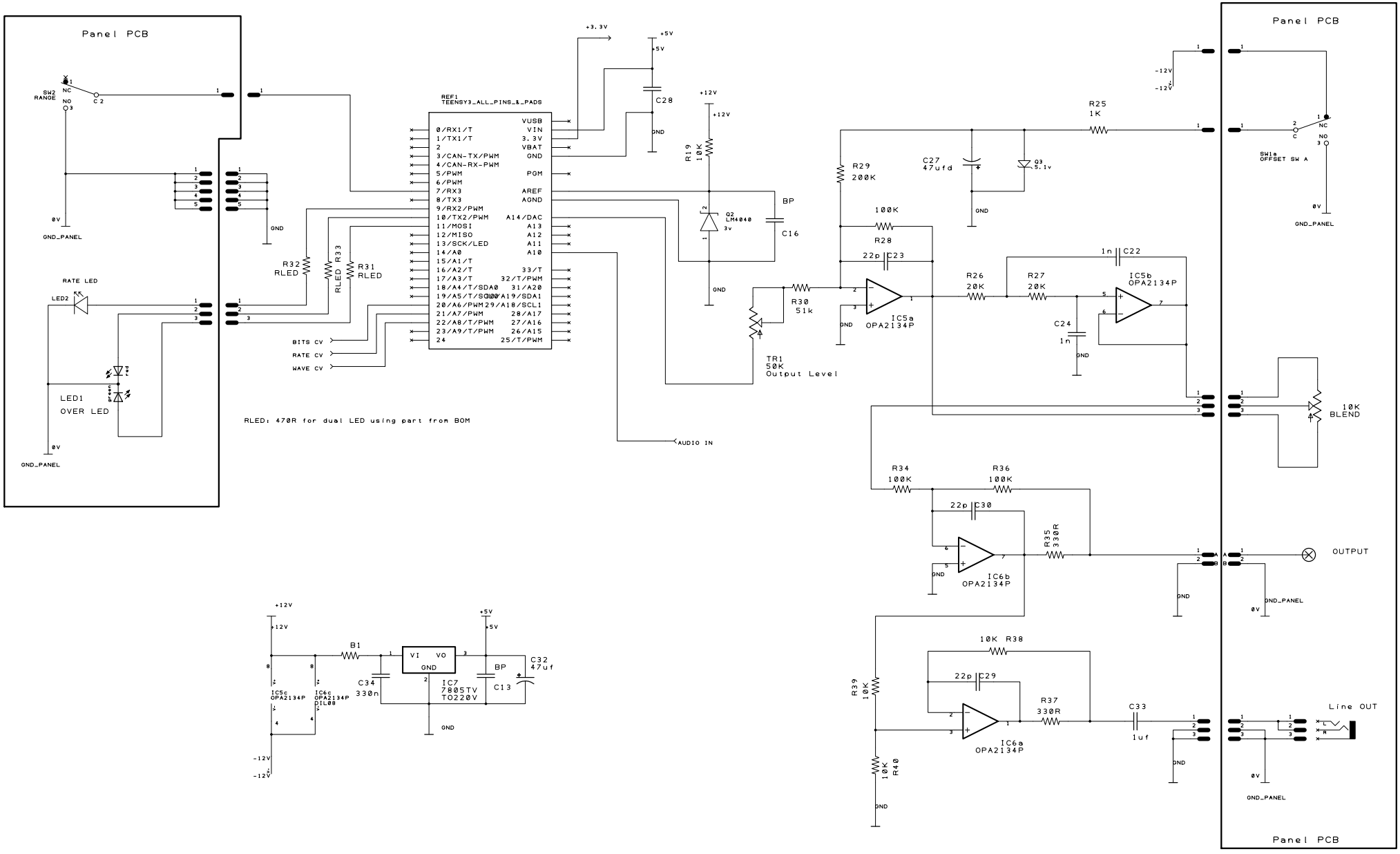

RLED: 470R for dual LED using part from BOM

Title	Filename	Drawing No.	Sheet
Craig Lee	Bit Crusher	BitCrusher P01	2 of 2

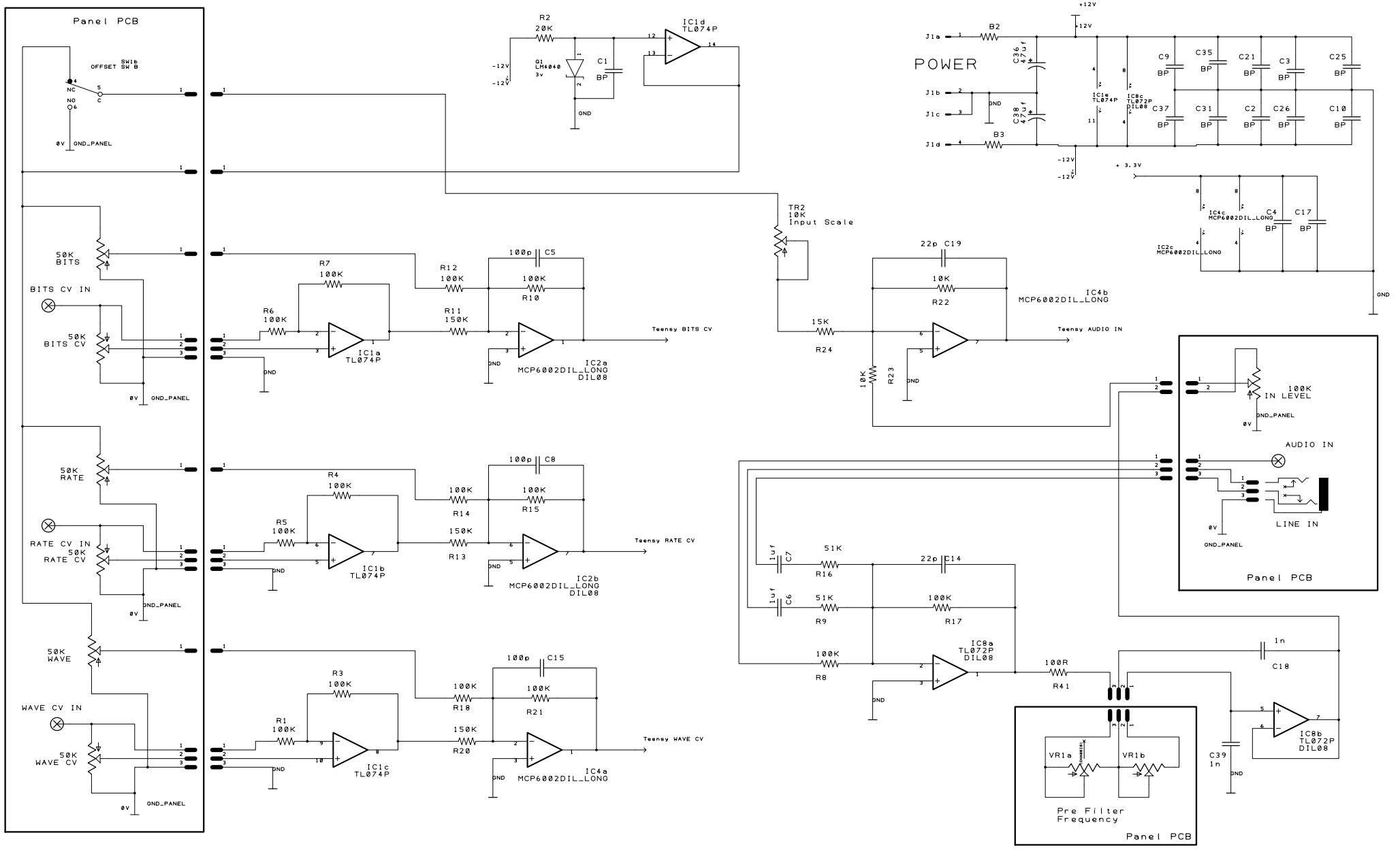

Title	Filename	Drawing No.	Sheet
PCB Craig Lee	Bit Crusher		1 of 2